K2 SERIES 2-3.5 t GROS

Manufacturer and technical parameters

	Characteristics										
1.01	Manufacturer			HELI							
1.02	Model			CPC20	CPCD20	CPC25	CPCD25	CPC30	CPCD30	CPC35	CPCD35
1.03	Rated capacity		kg	2000		2500		3000		3500	
1.04	Load center		mm	500		500		500		500	
1.05	Driving mode			Diesel							
1.06	Power type			Sit-ontype							
	Dimensions										
2.01	Lifting height (standard)	H	mm	3000		3000		3000		3000	
2.02	Mast overall height(Fork to the ground and mast be vertical)	H1	mm	2000		2000		2070		2120	
2.03	Max.fork lifting height(With backrest)	H2	mm	4030		4030		4217		4217	
2.04	Free lift height	H3	mm	150		150		155		160	
2.05	Overall height(Overhead guard)	H4	mm	2120		2120		2140		2140	
2.06	Min.groung clearance(At the mast)	H5	mm	115		115		135		135	
2.07	Distance from the surface of the seat to the overahead guard	H6	mm	1050		1050		1050		1050	
2.08	Traction pin height	H9	mm	290		290		310		310	
2.09	Backrest height(Calculated from the surface of the fork)	H13	mm	1000		1000		1182		1177	
2.10	Overall length(With fork/Without fork)	(L/L')	mm	3460/2540		3680/2610		3814/2744		3820/2750	
2.11	Wheel base	L1	mm	1650		1650		1750		1750	
2.12	Front overhang	L2	mm	465		465		478		484	
2.13	Rear overhang	L3	mm	425		495		520		520	
2.14	Overall width	W1	mm	1160		1160		1225		1225	
2.15	Tread (Front tread/Rear tread)	(W3/W2)	mm	970/970				1000/970			
2.16	Fork adjustable range(the external of the fork)(Max./Min.)	W5	mm	1030/244		1030/244		1060/250		1060/250	
2.17	Min.turning radius(Exterior)	r	mm	2215		2270		2400		2400	
2.18	Min.turning radius(Interior)	r'	mm	35		35		80		80	
2.19	Min.right angle stacking aisle width	Ra	mm	2235		2290		2360		2360	
2.20	Mast tilting angle (forward /rear)	α/β	deg.	6°/12°		6°/12°		6°/12°		6°/12°	
2.21	Fork size	L4xWxT	mm	920x122x40		1070x122x40		1070x125x45		1070x125x50	
	Weight										
3.01	Total weight		kg	3300		3650		4270		4600	
3.02	Weight distribution loaded (Front/Rear)		kg	4710/590		5440/710		6430/840		7280/820	
3.03	Weight distribution unloaded (Front/Rear)		kg	1540/1760		1470/2180		1750/2520		1790/2810	
	Wheel and tyre										
4.01	Wheel number x = drive wheel (Front/Rear)			2X/2							
4.02	Tyre type(Front/Rear)			Pneumatic tyre							
4.03	Tyre size(Front/Rear)			7.00-12-12PR/6.00-9-10PR				28x9-15-14PR/ 6.5-10-10PR		28x9-15-14PR/ 6.5-10-10PR	
4.04	Service brake			Hydraulic-foot Pedel							
4.05	Parking brake			Mechanical-Hand lever							

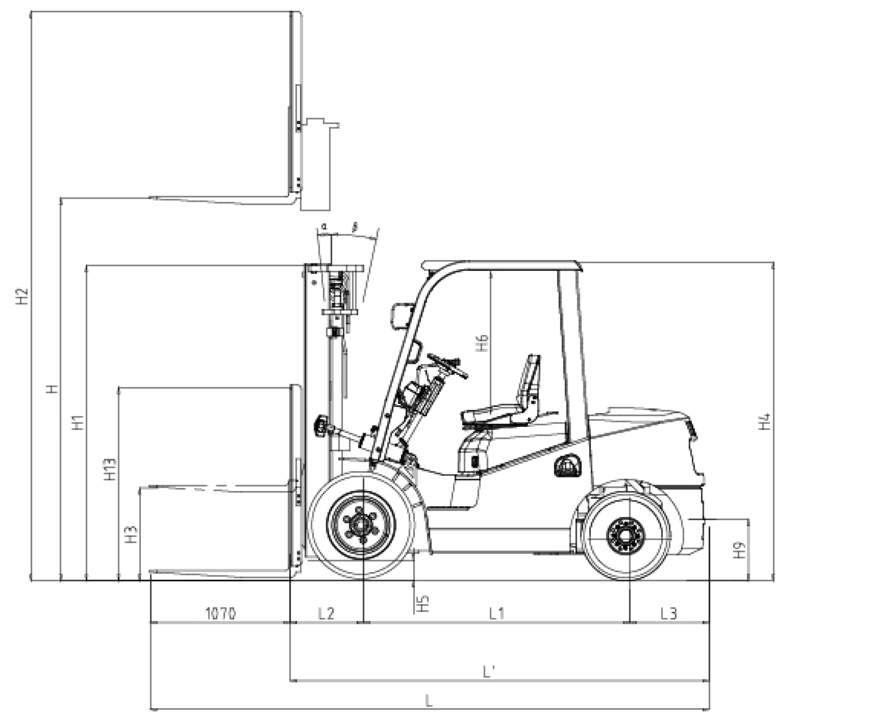

RASA: Right angle stacking aisle width
a: Clearance
L4: Length of fork

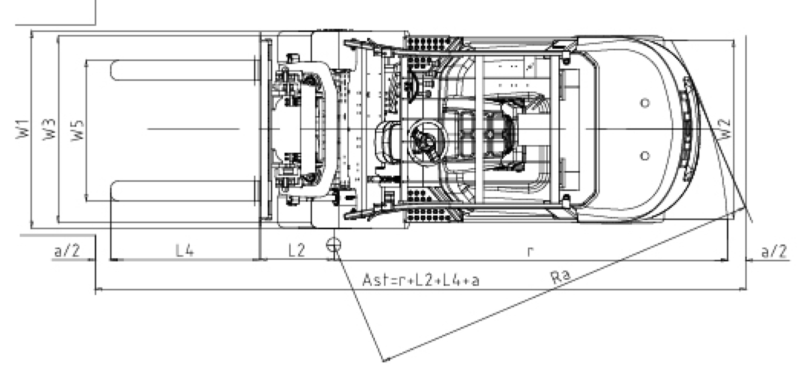

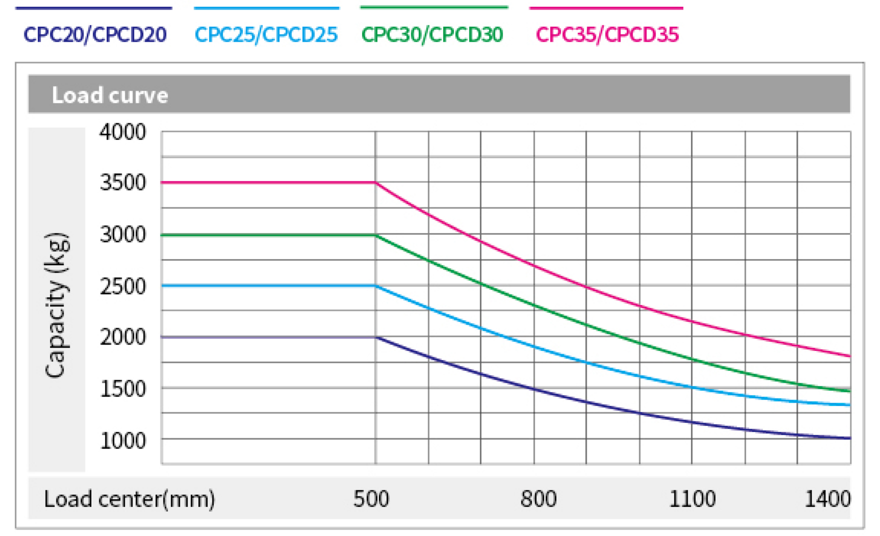

Note: The vertical axis stands for load capacity and the horizontal axis stands for load center which is calculated from the front of the fork. The base point of the standard load refers to the center position of the cube with 1000mm length of side. When mast is tilted forward, nonstandard fork usage or load with over wide goods, load capacity will be reduced. Different load capacity in different load center can be known in time through load chart.

Truck main specifications and drive and transmission control device

Performance																							
Model		CPC20	CPCD20	CPC25	CPCD25	CPC30	CPCD30	CPC35	CPCD35	CPC20	CPCD20	CPC25	CPCD25	CPC30	CPCD30	CPC20	CPCD20	CPC25	CPCD25	CPC30	CPCD30	CPC35	CPCD35
Max. Travelling speed (loaded/unloaded)	km/h	18/18		18/18		19/19		19/19		18/19		18/19		19/20		18/19		18/19		18/19		18/19	
Lifting Speed (Loaded/Unloaded)	mm/s	500/550		500/550		475/495		400/420		500/550		500/550		455/480		455/480		400/420		455/480		400/420	
Lowing Speed (Loaded/Unloaded)	mm/s	450/500		450/500		450/500		450/500		450/500		450/500		450/500		450/500		450/500		450/500		450/500	
Max.drawbar pull (Loaded/Unloaded)	kN	17/12	17/12	18/12.5	18/12.5	19/15	19/16	19/14	19/16	16.2/12.5	16.2/12.5	19.3/11.7	19.3/11.7	19.5/16	19.5/16	16.5/14	16.5/14	19.5/12	19.5/12	20/17	20/17	21.5/14	21.5/14
Max.Gradeability (Loaded/Unloaded)	%	27/29	27/37	25/23	31/23	22/23	22/26	20/22	20/25	18/29	26/32	15/27	26/27	13/22	19/24	18/29	27/32	16/28	26/28	15/23	20/24	15/23	22/24
Drive and transmission control device																							
Battery(Voltage/Capacity)	V/Ah	12/80								12/80						12/80							
Engine manufacturer /mode		QUANCHAI 4C2-50C41								ISUZU C240						Mitubishi S4S							
Rated power/Speed	kW/rpm	36.8/2500								35.4/2500						35.3/2250							
Max. torque/Speed	Nm/rpm	170/1400-2000								139.9/1800						177/1700							
Cylinder number-Bore×Stroke/Displacement	/L	4-90x105/2.67								4-86x102/2.369						4-94x120/3.331							
Engine fuel tank capacity	L	70								70						70							
Emission		China Stage III								China Stage III / Euro Stage IIIA						China Stage III / Euro Stage IIIA							
Tranmission box shifting gears		1-1 Power Shift T/M / 2-2 Manual Shift T/M																					

Engine Model and Main Specification for Option

Engine model	Truck model	Rated power/ Speed (Kw/rpm)	Max. torque/ Speed (Nm/rpm)	Engine displacement (L)	Cylinder number - BorexStroke	Emission
QUANCHAI QC490	CPC20~35-Q22K2 CPCD20~35-Q22K2	39/2650	157/1800	2.67	4-90x105	China Stage II
XINCHANG C490BPG-200	CPC20~35-XC5K2 CPCD20~35-XC5K2	40/2650	160/1800~2000	2.67	4-90x105	China Stage II
XINCHANG A498BT1-39B	CPC20~35-XC22K2 CPCD20~35-XC22K2	36.8/2400	186/1600~1800	3.17	4-98x105	Euro Stage IIIA
GCT K21	CPQ(D)20~30-RCK2 CPY(D)20~30-RCK2 / CPQY(D)20~30-RCK2	31.2/2200	143.7/1600	2.065	4-89x83	-
GCT K25	CPQ(D)25~35-RC1K2 CPY(D)25~35-RC1K2 / CPQY(D)25~35-RC1K2	37.4/2400	176.5/1600	2.488	4-89X100	-
ISUZU C240	CPC20~30-WS1K2 CPCD20~30-WS1K2	35.4/2500	139.9/1800	2.369	4-86x102	China Stage III / Euro Stage IIIA
QUANCHAI 4C2-50C41	CPC20~35-Q13K2 CPCD20~35-Q13K2	36.8/2500	170/1400~2000	2.67	4-90x105	China Stage III
Mitubishi S4S	CPC20~35-M1K2 CPCD20~35-M1K2	35.3/2250	177/1700	3.331	4-94x120	China Stage III / Euro Stage IIIA

WIDE VIEW MAST

Mast model	Max. lifting height mm	Load capacity (load center 500mm) (kg)				Mast overall height (fork to the ground) (mm)			Service weight (kg)				Mast tilting angle (°)α/β
		2t	2.5t	3t	3.5t	2-2.5t	3t	3.5t	2t	2.5t	3t	3.5t	
M200	2000	2000	2500	3000	3500	1500	1570	1620	3210	3560	4170	4490	6/12
M250	2500	2000	2500	3000	3500	1750	1820	1870	3260	3600	4220	4550	6/12
M300	3000	2000	2500	3000	3500	2000	2070	2120	3300	3650	4270	4600	6/12
M330	3300	2000	2500	3000	3500	2150	2220	2270	3330	3670	4290	4630	6/12
M350	3500	2000	2500	3000	3500	2250	2320	2370	3350	3690	4310	4650	6/12
M370	3700	2000	2500	3000	3500	2350	2420	2470	3360	3710	4330	4670	6/12
M400	4000	1950	2350	2850	3200 *3500	2550	2620	2670	3440	3790	4410	4760	6/12 *6/12
M425	4250	1900 *2000	2200 *2500	2750 *3000	3100 *3200	2675	2745	2795	3460	3810	4440	4780	6/6 *6/12
M450	4500	1700 *1900	1950 *2400	2650 *3000	2950 *3050	2800	2870	2920	3490	3830	4460	4810	6/6 *6/12
M500	5000	1500 *1700	1700 *2200	2400 *2700	2450 *2850	3050	3120	3170	3530	3880	4510	4860	6/6 *6/6
M550	5500	*1600	*2000	*2400	*2500	3350	3420	3470	3630	3970	4610	4970	*6/6
M600	6000	*1500	*1800	*2200	*2300	3600	3670	3720	3670	4020	4650	5020	*6/6

Note: (1) *stands for the rated capacity when the front tyre is double-tyre. (2) When the front tyre of the 2-3.5t truck is double tyre, the service weight of the truck is the weight in the table plus 110kg.

WIDE VIEW FULL FREE 2-STAGE MAST

Mast model	Max. lifting height mm	Load capacity (load center 500mm) (kg)				Mast overall height (fork to the ground) (mm)			Free lifting height (with backrest)(mm)			Service weight (kg)				Mast tilting angle (°)α/β
		2t	2.5t	3t	3.5t	2-2.5t	3t	3.5t	2-2.5t	3t	3.5t	2t	2.5t	3t	3.5t	
ZM200	2000	2000	2500	3000	3500	1500	1570	1620	500	340	443	3240	3580	4190	4510	6/12
ZM250	2500	2000	2500	3000	3500	1750	1820	1870	750	590	693	3290	3630	4240	4560	6/12
ZM300	3000	2000	2500	3000	3500	2000	2070	2120	1000	840	943	3330	3680	4290	4620	6/12
ZM330	3300	2000	2500	3000	3500	2150	2220	2270	1150	990	1093	3360	3710	4320	4650	6/12
ZM350	3500	2000	2500	3000	3500	2250	2320	2370	1250	1090	1193	3380	3730	4340	4670	6/12
ZM370	3700	2000	2500	3000	3500	2350	2420	2470	1350	1190	1293	3400	3750	4360	4690	6/12
ZM400	4000	2000	2350	2850	3200 *3500	2550	2620	2670	1550	1390	1493	3480	3820	4440	4770	6/12 *6/12
ZM425	4250	1900 *2000	2200 *2500	2750 *3000	3100 *3200	2675	2745	2795	1675	1515	1618	3500	3850	4470	4800	6/6 *6/12
ZM450	4500	1700 *1900	2000 *2400	2650 *3000	2950 *3050	2800	2870	2920	1800	1640	1743	3530	3870	4490	4830	6/6 *6/12
ZM500	5000	1500 *1700	1700 *2200	2400 *2700	2450 *2850	3050	3120	3170	2050	1890	1993	3580	3920	4550	4890	6/6 *6/6
ZM550	5500	*1600	*2000	*2400	*2500	3350	3420	3470	2350	2190	2293	3680	4020	4650	4990	*6/6
ZM600	6000	*1500	*1800	*2200	*2300	3600	3670	3720	3500	2440	2543	3730	4070	4700	5040	*6/6

Note: (1) *stands for the rated capacity when the front tyre is double-tyre.
(2) When the front tyre of the 2-3.5t truck is double tyre, the service weight of the truck is the weight in the table plus 110kg.

WIDE VIEW FULL FREE 3-STAGE MAST

Mast model	Max. lifting height mm	Load capacity (load center 500mm) (kg)				Mast overall height (fork to the ground) (mm)		Free lifting height (with backrest)(mm)		Service weight (kg)				Mast tilting angle (°)α/β
		2t	2.5t	3t	3.5t	2-2.5t	3t/3.5t	2-2.5t	3t/3.5t	2t	2.5t	3t	3.5t	
ZSM360	3600	2000	2400	2900	3500	1800	1870	800	640	3460	3800	4410	4710	6/6
ZSM400	4000	1900	2400	2900	3050	1950	2020	950	790	3500	3840	4450	4750	6/6
ZSM435	4350	1850 *1900	2150 *2400	2700 *2900	2900 *3000	2050	2120	1050	890	3530	3880	4480	4780	6/6 *6/6
ZSM450	4500	1700 *1800	1950 *2300	2600 *2800	2800 *2900	2100	2170	1100	940	3540	3890	4490	4790	6/6 *6/6
ZSM470	4700	1600 *1800	1850 *2300	2550 *2900	2650 *2900	2165	2230	1165	1000	3560	3910	4510	4810	6/6 *6/6
ZSM480	4800	1500 *1800	1750 *2300	2450 *2800	2550 *2900	2210	2270	1210	1040	3580	3920	4520	4820	6/6 *6/6
ZSM500	5000	1400 *1750	1550 *2000	2250 *2650	2350 *2700	2300	2370	1300	1140	3600	3940	4550	4850	6/6 *6/6
ZSM540	5400	1300 *1700	1450 *2100	2100 *2400	2250 *2500	2400	2470	1400	1240	3630	3980	4580	4880	6/6 *6/6
ZSM600	6000	*1400	*1700	1400 *2100	1550 *2200	2600	2670	1600	1440	3730	4080	4680	4980	6/6 *6/6

Note: (1) *stands for the rated capacity when the front tyre is double-tyre.
(2) When the front tyre of the 2-3.5t truck is double tyre, the service weight of the truck is the weight in the table plus 110kg.